SIDE LOCK HOLDER CT SHANK-ANSI B 5.50

FOR "WELDON' TYPE END MILLS

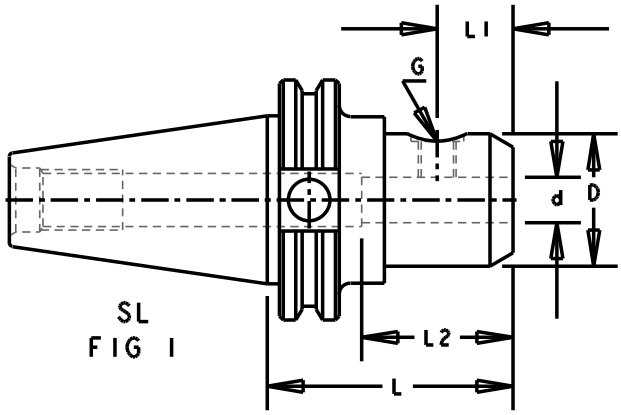

SL
FIG 1

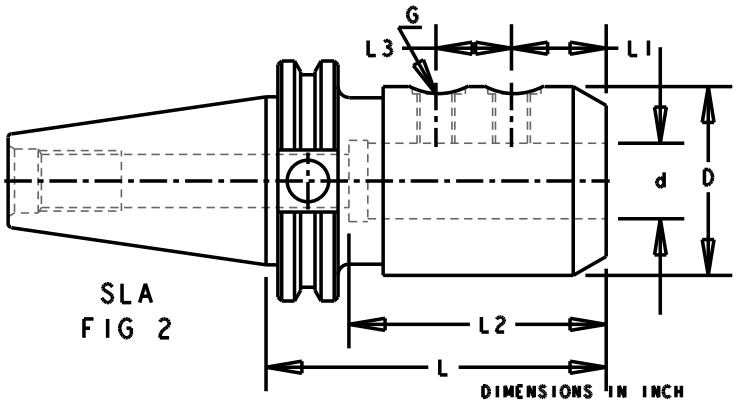

SLA
FIG 2

DIMENSIONS IN INCH

DESIGNATION	d	L	D	L1	L2		L3	G	FIG.
					MIN	MAX			
CT40/SL3/8/2.50	0.750	2.500	1.00	0.750	1.500	-	-	3/8-24	1
CT40/SL1/2/2.63	0.500	2.630	1.25	0.875	1.750	-	-	7/16-20	1
CT40/SL3/4/3.75	0.750	3.750	1.750	1.000	2.000	-	-	5/8-18	1
CT40/SLA1"/4.00	1.000	4.000	2.000	1.250	2.500	-	1.000	3/4-16	2
CT45/SL3/8/2.50	0.750	2.500	1.00	0.750	1.500	-	-	3/8-24	1
CT45/SL1/2/2.63	0.500	2.630	1.25	0.875	1.750	-	-	7/16-20	1
CT45/SL3/4/3.75	0.750	3.750	1.750	1.000	2.000	-	-	5/8-18	1
CT45/SLA1"/4.00	1.000	4.000	2.000	1.250	2.500	-	1.000	3/4-16	2
CT50/SL3/8/2.50	0.750	2.500	1.00	0.750	1.500	-	-	3/8-24	1
CT50/SL1/2/2.63	0.500	2.630	1.25	0.875	1.750	-	-	7/16-20	1
CT50/SL3/4/3.75	0.750	3.750	1.750	1.000	2.000	-	-	5/8-18	1
CT50/SLA1"/4.00	1.000	4.000	2.000	1.250	2.500	-	1.000	3/4-16	2

SHEET- CT (WELDON)

NOTE:
- THE FRONT END DIMENSIONS AS PER ANSI Std.
- FOR OTHER TAPERS VIZ BT & TC, SEE SEPARATE SHEETS.
- BALANCING: NORMAL 6.3G AT 10000 RPM.
- ANY SPECIAL SIZES CAN BE MADE TO CUSTOMERS REQUEST.

ORDERING INSTRUCTION

CT40/SLA1"/90

- GAUGE PLANE LENGTH L
- HOLDING DIAMETER
- SHANK TYPE